Temperaturgivare för insvetsning svarvad skyddsficka, form 4

Användningsområde

För temperaturmätning i ånga och vätskor i rör och tankar vid högt tryck och höga flöden. Anpassad enligt DIN standard 43772.

Armatur

Monterad i en solid konad form 4 skyddsficka för insvetsning. För tillgängliga material se beställningskod nedan.
Halsrör av syrafast stål / 1.4571 eller likvärdigt, Ø 12 mm.
Standard halsrörslängd HL = 165 mm.

Mätinsats

Bytbar mätinsats av syrafast stål D = Ø 6 mm. Insatslängd = FL + HL + 10 mm.
För utförlig information om mätinsatsen se TR/TC 100.

Godkännande

Givaren finns med ATEX-godkännande men med vissa begränsningar i beställningalternativen. För mer information se hemsidan.

Processtemperatur

TRA	-196...+600 °C
TCA	-40...+600 °C*

Kapslingsklass

Se avsnitt Kopplingshuvuden på sida 120.

Svarstider skyddsfickor

Typ	Vatten 0.4 m/s		Luft 1 m/s	
	t 0.5	t 0.9	t 0.5	t 0.9
140/65 (D1)	40 s	2.3 min	5.8 min	21.7 min
200/125 (D2)	40 s	2.3 min	5.8 min	21.7 min
200/65 (D4)	40 s	2.3 min	5.8 min	21.7 min
260/125 (D5)	40 s	2.3 min	5.8 min	21.7 min

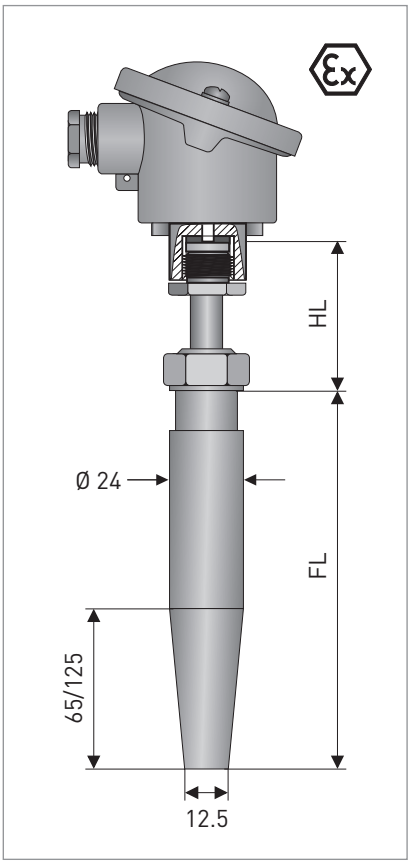

Dimensioner i mm

För mer detaljerade dimensioner se kapitel "Dimensioner för insticksgivare" på sida 149.

Beställningskod för TRA-T30 med standardinställningar

V	T	S	2	4	1	0	1	3	1	1	B	0	0	P	6	1	1	0	0	0	0	0	0	0	0	1	0
					1					6	7	8				12											

Detta är ett urval av de valmöjligheter som finns för denna givare. För komplett beställningskod se sidan 33.

1. TYP

1	Motståndsgivare	TRA-T30
A	Termoelement	TCA-T30

6. MATERIAL SKYDDSFICKA

1	1.4571 / 316Ti	upp till 600 °C
3	1.4404 / 316L	upp till 600 °C

7. DIAMETER SKYDDSFICKA (Ø)

A	D1 / Form 4, Ø24 mm, FL=140 / U1 = 65 mm
B	D2 / Form 4, Ø24 mm, FL=200 / U1 = 125 mm
C	D4 / Form 4, Ø24 mm, FL=200 / U1 = 65 mm
D	D5 / Form 4, Ø24 mm, FL=260 / U1 = 125 mm

8. PROCESSANSLUTNING

0	Utan	
X	Svetsstos	Ø 48 x 50, 1.4571

12. HALSRÖRSANSLUTNING

1	M18n1.5
3	G 1/2

* Temperaturspannet kan utökas med annat material i skyddsfickan.

KOMPLETT BESTÄLLNINGSNYCKEL

VTS2 4

1. Type

Without thermowell			
5	TRA-S 34	"Screw-in, without thermowell"	
E	TCA-S 34	"Screw-in, without thermowell"	
Screw-in thermowell			
3	TRA-TS 32	Form 5	
6	TRA-TS 35	Union nut, Form 8	
7	TRA-TS 36	Barstock, Form 6, 7	
8	TRA-TS 37	Barstock, Union nut, Form 9	
C	TCA-TS 32	Form 5	
F	TCA-TS 35	Union nut, Form 8	
G	TCA-TS36	Barstock, Form 6,7	
H	TCA-TS37	Barstock, Union nut, Form 9	
Flange thermowell			
2	TRA-TF 31	"Flange", Form 4F	
4	TRA-TF 33	"Flange"	
B	TCA-TF 31	"Flange", Form 4F	
D	TCA-TF 33	"Flange"	
Weld-in thermowell			
1	TRA-T 30	"Weld-in" , Form 4	
A	TCA-T 30	"Weld-in" , Form 4	

TRA = Resistance thermometers
TCA = Thermocouples

2. Certificate

0	without		
1	**ATEX Ex ia**		
4	IECEx Ex ia		

3. Connection heads

Aluminium M20x1,5				
1	BA	screw cover, IP65		
2	BUZ-S	hinged cover, snap, IP65		
3	BUZ-T	hinged cover, screw, IP65	[Ex]	
4	BGK	screw cover, IP65		
5	BUZ-H	hinged cover, IP65	[Ex]	
6	BUZ-HW*	with indicator, IP65		
A	AXD	screw cover, IP68	[Ex]	
P	AXD-W*	screw cover+Indicator, IP68	[Ex]	
Stainless steel M20x1,5				
8	BVA	screw cover, IP65		
C	SXD	screw cover, IP68	[Ex]	
M	BHY	screw cover, M16x1,5,IP67		
R	SXD-W*	screw cover+Indicator, IP68	[Ex]	
Polyamide M20x1,5				
B	BUZ-HK	hinged cover, IP54	[Ex]	
7	BBK	screw cover, IP54		

** indicator 4-digit loop powered LCD with floating zero*

4. Measuring insert = sensor / wiring

0	without			
2	1x Pt100 3-wire		[Ex]	
3	1x Pt100 4-wire		[Ex]	
4	2x Pt100 3-wire	(Cl.A, WW)	[Ex]	
5	2x Pt100 4-wire	(Cl.A, WW)	[Ex]	
Measuring insert = sensor / wiring				
8	1x Pt100 3-wire + Smart Sense			
A	1x Thermocouple Type J (Fe-CuNi)		[Ex]	
B	1x Thermocouple Type K (NiCr-Ni)		[Ex]	
D	2x Thermocouple Type J (Fe-CuNi)		[Ex]	
E	2x Thermocouple Type K (NiCr-Ni)		[Ex]	

5. Measuring insert / tolerance class

0	without					
1	Cl. B	Mi, TF	thinfilm	(tolerance class -50 …+500°C)	[Ex]	
2	Cl. A	Mi, TF	thinfilm	(tolerance class -30 ... +300°C)	[Ex]	
3	Cl. A, vibration-proof	Mi, TF	thinfilm	(tolerance class -20 ... +200°C)	[Ex]	
4	Cl. A	Mi, WW	Wire wounded	(tolerance class -100 ... +450°C)	[Ex]	
6	Cl. B	Mi, WW	Wire wounded	(tolerance class -200… +600°C)	[Ex]	
5	Cl. AA	Mi, WW	Wire wounded	(tolerance class -50… +250°C)	[Ex]	
7	1/10 DIN B	MI, WW	Wire wounded	(tolerance class at 0°C)	[Ex]	
A	Cl.1	MI, Thermocouple			[Ex]	

6. Thermowell material

			type
0	without		(34)
1	1.4571 / 316Ti	up to 600°C	(30-33/35-37)
3	1.4404 / 316 L	up to 600°C	(30-33/35-37)
H	2.4602 / Hastelloy C22		(32) only for Ø12 mm and G1/2 process connection

7. Thermowell diameter

0	without		(34)	A	Form4 (D1), 24mm, L=140/SL=65 mm	(30)
1	9 mm	1.4571	(32/33/35)	B	Form4 (D2), 24 mm, L=200/SL=25mm	(30)
2	10 mm	1.4404	(32/33/35)	C	Form4 (D4), 24 mm, L=200/Sl=65mm	(30/31)
3	11 mm	1.4571	(32/33/35)	D	Form4 (D5), 24 mm, L=260/Sl=125mm	(30/31)
4	12 mm	1.4571/1.4404	(32/33/35)			
7	17x5 mm, Form 7 and 9		(36/37)			

8. Process connection E(N)

0	without / Thread		(30/34)	B	Flange	DN25	DIN 1092-1	(31/33)
1	G 1/2 A		(32/35/36/37)	C	Flange	DN40	DIN 1092-1	(31/33)
2	G 3/4 A		(32/35/36/37)	D	Flange	DN50	DIN 1092-1	(31/33)
3	G 1 A		(32/35/36/37)	H	Flange	ASME 1"		(31/33)
5	1/2" NPT		(32/35/36/37)	L	Flange	ASME 1 1/2"		(31/33)
6	3/4" NPT		(32/35/36/37)					
7	1" NPT		(32/35/36/37)	X	Weld-in fitting Ø 48 x 50			(30)

9. Pressure rating

0	without / Thread	A	150 lbs RF
1	PN 40 Form B1	B	300 lbs RF

10. Ins. lenght/diam.: type

0	without		F	150 mm	(32…35)	8	260 mm, (33-35,37)		E	410 mm	(33,35,37)
1	80 mm	(32,3436)	5	170 mm	(33,35,37)	A	300 mm, (34)		H	450 mm	(33,35,37)
2	100 mm	(34)	6	200 mm	(34)	B	350 mm, (34)		K	500 mm	(33,35,37)
3	110 mm	(33,35,37)	7	230 mm	(32,3436)	C	380 mm, (32,34,36)		P	Form 4, (D1…D5)	
4	140 mm	(32,34,36)	G	250 mm	(33,35,37)	D	400 mm, (34)		Z	Custom. length (55…6000)	

11. Extension tube length HL

1	80 mm	6	165 mm	[Std-length]	D	140	H	180
2	90 mm	A	70 mm		E	150	K	190
4	110 mm	B	100 mm		F	160	L	200
5	145 mm	C	120 mm		G	170	Z	customised (55…400 mm)

12. Extension tube connection, P

1	M18x1,5	(30-34, 36)	D	union nut G 1/2	(34,35, 37)
3	G 1/2	(30-34, 36)	E	union nut G 3/4	(34,35, 37)
4	G 3/4	(30-34, 36)			

13. Type of connection / head mounted transmitter

0	with flying leads for transmittter mounting			
1	Standard version with ceramic terminal block			
L	with head mounted transmitter	// APAQ C130	Basic, RTD/TC	
4	with head mounted transmitter	// IPAQ C202	Basic, RTD	[Ex]
C	with head mounted transmitter	// IPAQ C330	Universal	[Ex]
E	with head mounted transmitter	// IPAQ C520	Smart, HART, SIL2	[Ex]
M	with head mounted transmitter	// IPAQ C530	Smart, HART, SIL2	[Ex]

Vissa kombinationer är inte möjliga. Vänligen kontakta KROHNE Inor för ytterligare information.

VTS2	4															

14. Type of connection / rail mounted transmitter

0	without			
L	with rail mounted transmitter	// APAQ R130	Basic, RTD/TC	
A	with rail mounted transmitter	// IPAQ-4L	Universal, 90 - 250 VAC	
B	with rail mounted transmitter	// IPAQ-4L	Universal, 20 - 30 VDC	
C	with rail mounted transmitter	// IPAQ R330	Universal	[Ex]
H	with rail mounted transmitter	// IPAQ R520	Smart, HART SIL2	[Ex]
M	with rail mounted transmitter	// IPAQ R530	Smart HART	[Ex]

15. Measuring range

0	without	6	0…+100°C	D	0… +400°C
1	customised*	7	0…+150°C	E	0… +450°C
2	-50 … +50°C	8	0…+200°C	F	0… +500°C
3	-50 …+100°C	A	0…+250°C	G	0… +600°C
4	-50 …+150°C	B	0…+300°C	H	0… +800°C
5	0 … +50°C	C	0…+350°C	K	0…+1000°C

16. Calibration report

0*	without		
	Sensor calibration		
1	1-point	(single)	room temperature
P	2-point	(single)	0°, 100°C
R	2-point	(double)	0°, 100°C
2	2-point	(single)	0%, 100% of range
3	2-point	(double)	0%, 100% of range
S	3-point	(single)	0°, 50°, 100°C
T	3-point	(double)	0°, 50°, 100°C
4	3-point	(single)	0%, 50%, 100% of range
5	3-point	(double)	0%, 50%, 100% of range
6	customised (single)		
7	customised (double)		
	Sensor + Transmitter calibration		
A	2-point	(single)	0%, 100% of range
B	3-point	(single)	0%, 50%, 100% of range
C	5-point	(single)	0%, 25%, …, 100% of range
	Sensor + Transmitter calibration with error correction		
E	2-point	(single)	0%, 100% of range
F	3-point	(single)	0%, 50%, 100% of range
G	5-point	(single)	0%, 25%, …, 100% of range
H	customised		

17. Test certificate

0	without
1	Declaration of compliance with order, 2.1 according to EN 10204

18. Pressure test on wetted parts

0	without
1	Pressure test with test report 2.2 EN 10204
2	Pressure test with inspection certificate 3.1 EN 10204

19. Material certification on wetted parts

0	without
1	Material certificate 3.1 according to EN 10204
2	PMI test metall. pressurized wetted parts, certificate 3.1
4	Material & PMI test certificate 3.1 according to EN 10204

20. Marking

0	without	
1	Stainless steel tag plate	(40 x 20 mm)
2	Stainless steel tag plate	(120 x 46 mm)
6	PVF- tag plate	(45 x 15 mm)

21. Operating instructions

0	without
1	German
3	English
4	French
5	Spanish
G	German/English

23. Version

0	without	
1	SIL2, EU- Manufacturer's declaration	[IPAQ 520]

VTS2	4																						1		0		Order code

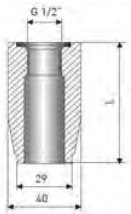

Accessories

Ordercode	Description	L (mm)
68SVS10505	Weld-in sleeve Ø 40 mm, Thread G1/2, 1.4404	50
68SVS11005	Weld-in sleeve Ø 40 mm, Thread G1/2, 1.4404	100

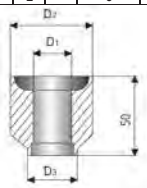

Ordercode	Description	D1	D2	D3	material
68SVS20001	Weldin sleeve Form 4	24	48	30	1.4571 / AISI 316Ti
68SVS20005	Weldin sleeve Form 4	24	48	30	1.4404 / AISI 316L
68SVS20006	Weldin sleeve Form 4	24	48	30	1.4301 / AISI 304
68SVS20003	Weldin sleeve Form 4	24	48	30	1.7335
68SVS20007	Weldin sleeve Form 4	24	48	30	1.4462 / Duplex
68SVS20002	Weldin sleeve Form 4	24	48	30	1.0460 / C22.8
68SVS20004	Weldin sleeve Form 4	24	48	30	1.5415 / 16Mo3

Vissa kombinationer är inte möjliga. Vänligen kontakta KROHNE Inor för ytterligare information.